Trade of Sheet Metalwork	
Module 3:	**Thermal Processes**
Unit 11:	**MMA Welding "T" Fillet**
	Phase 2

Table of Contents

List of Figures **5**

List of Tables **5**

Document Release History **6**

Module 3 – Thermal Processes **7**

Unit 11 – MMA Welding "T" Fillet 7
Learning Outcome: 7
Key Learning Points: 7
Training Resources: 7
Key Learning Points Code: 7

Diagrammatical Representation of Principle Welding Positions **9**

Standard Conventions **10**

Welding Symbols 10

Fusion Face **11**

Fusion Zone **11**

Leg Length **11**

Throat Thickness **12**

Parent Metal **12**

Penetration **12**

Excess Weld Metal (Reinforcement) **12**

Heat-Affected Zone **13**

T Joint **14**

Visual Examination 14

Multi-Run Fillet Weld **15**

Stopping and Re-starting **16**

Building Up Crater 16
Re-starting Runs 16

Distortion **17**

Causes of Distortion 17
Longitudinal Distortion 17
Transverse Contraction 17

Angular Distortion 17
Overcoming Distortion 18
Presetting 18
Distribution of Stresses 18
Restraint of Parts 18
Preheating 18
Peening 18

Self Assessment 19

Answers to Questions 1-3. Module 3.Unit 11 21

Index 24

List of Figures

Figure 1 - M.M.A. Fillet Weld 8
Figure 2 - Principle Representation of Welding Positions 9
Figure 3 - Fusion Face 11
Figure 4 - Leg Length 11
Figure 5 - Excess Weld Metal 12
Figure 6 - Heat-Affected Zone 13
Figure 7 - Causes of Distortion 17

List of Tables

Table 1 - Welding Symbols 10

Document Release History

Date	Version	Comments
04/10/06	First draft	
08/04/14	2.0	SOLAS transfer

Module 3 – Thermal Processes

Unit 11 – MMA Welding "T" Fillet

Duration – 7 Hours

Learning Outcome:

By the end of this unit each apprentice will be able to:

- Read and interpret drawing and weld symbol
- Operate and adjust welding power source
- Select suitable electrodes
- Tack weld plates to form T fillet
- Complete T fillet weld in downhand positions

Key Learning Points:

Rk D	Weld symbol. *(See "Welding Symbols" section in Module 3 Unit*
Rk Sk	Welding technique - electrode angle, electrode manipulation. *(See "Welding Techniques" section in Module 3 Unit 10)*
Sk Rk	Pick-up techniques.
Rk	Distortion control.
Rk	Weld defects. *(See "Weld Defects and their Causes" section in Module 3 Unit 10)*
Rk	Fillet weld profile - convex, concave, leg length, throat thickness.
Rk	Safety - welding in confined spaces - ventilation, fully insulated equipment. *(See "Safety" section in Module 3 Unit 10)*

Training Resources:

- MMA welding power source
- Figure 1
- Safety clothing and equipment
- 3mm and 6 mm mild steel plate
- Video on MMA

Key Learning Points Code:

M = Maths D= Drawing RK = Related Knowledge Sc = Science

P = Personal Skills Sk = Skill H = Hazards

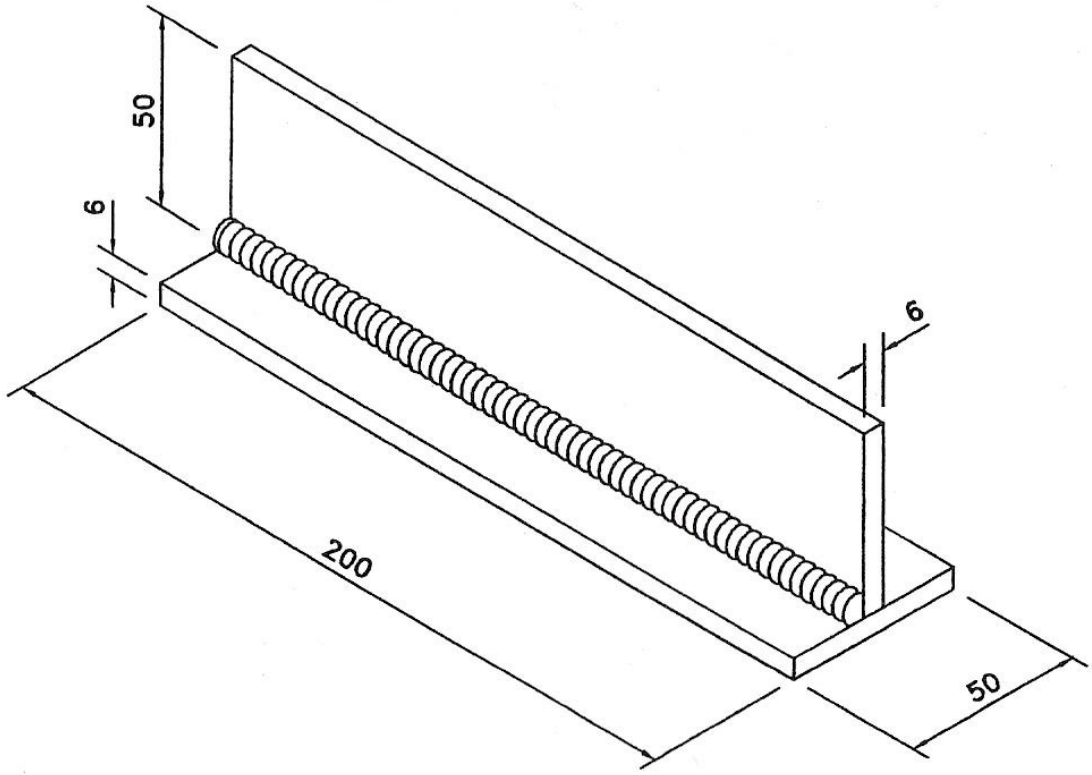

Figure 1 - M.M.A. Fillet Weld

Diagrammatical Representation of Principle Welding Positions

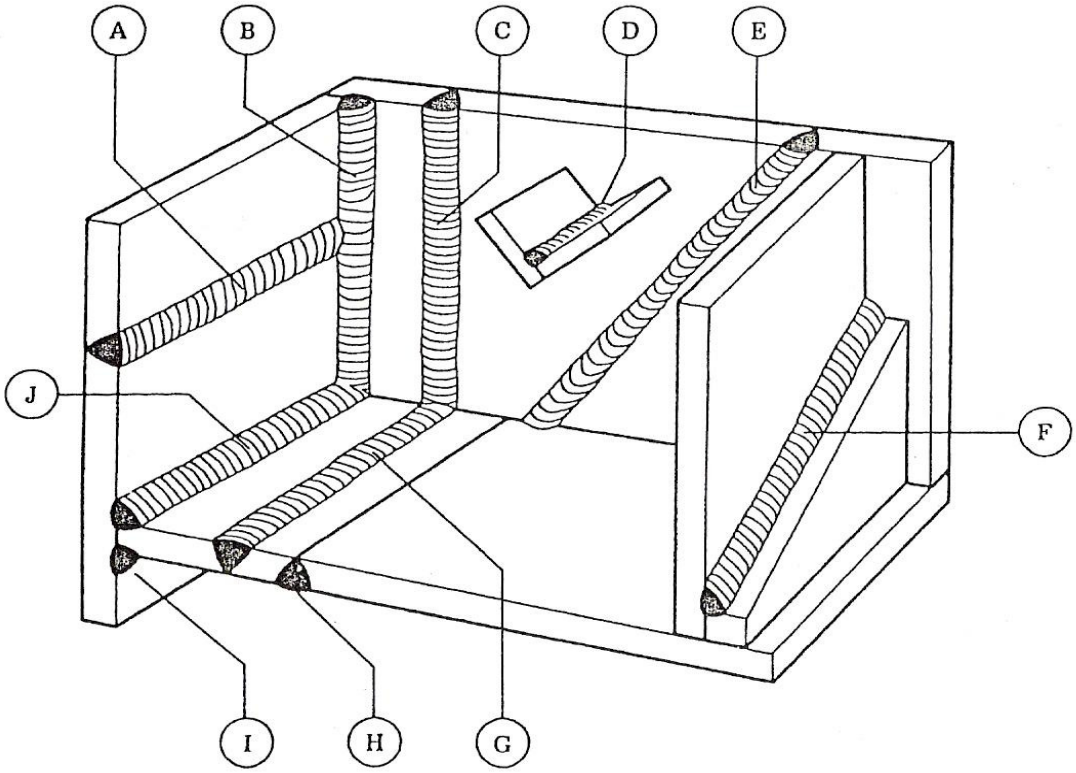

Figure 2 - Principle Representation of Welding Positions

Key:

A	-	Horizontal-vertical	F	-	Inclined fillet
B	-	Vertical fillet	G	-	Flat butt
C	-	Vertical butt	H	-	Overhead butt
D	-	Flat Fillet	I	-	Overhead fillet
E	-	Inclined butt	J	-	Horizontal-vertical fillet

BS 1719 Coding	Welding Positions
-0-	F, H, V, D, O
-1-	F, H, V, O
-2-	F, H
-3-	F
-4-	F, Hf (fillet welding only)

Standard Conventions

Welding Symbols

The scheme of symbols used to indicate the type, size and position of welds on drawings is laid down in B.S. 499, Part 2 (1965), from which the following symbols have been extracted.

Type of Weld	Symbol	Section Through Weld
Fillet		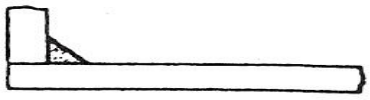
Square butt		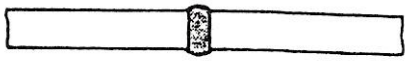
Single vee butt		
Double vee butt		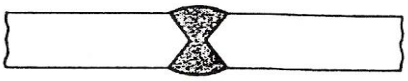
Single U butt		
Double U butt	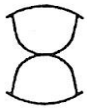	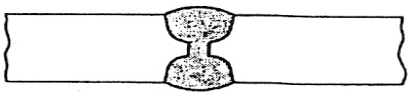
Single bevel butt		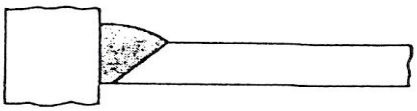
Double bevel butt	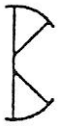	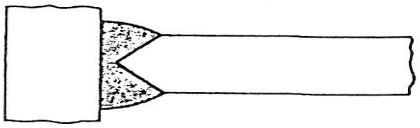
Single J butt		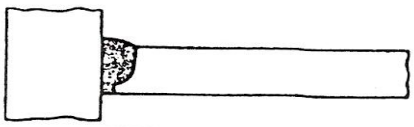
Double J butt		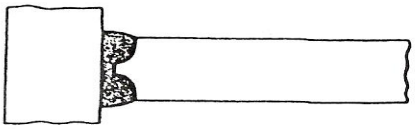

Table 1 - Welding Symbols

Fusion Face

The portion of a surface, or of an edge, which is to be fused on making the weld.

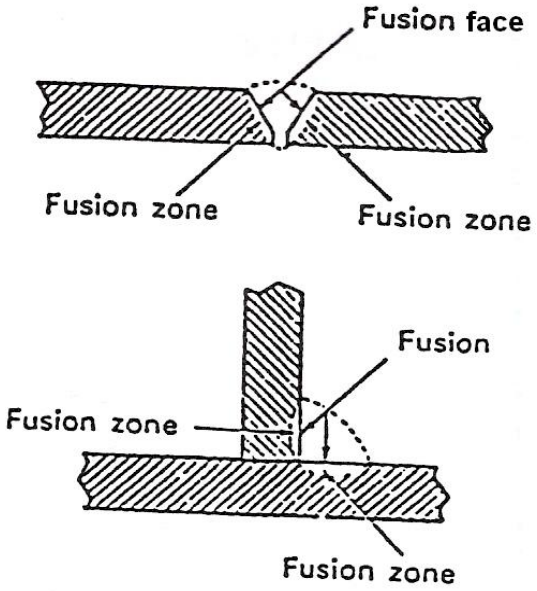

Figure 3 - Fusion Face

Fusion Zone

The depth to which the parent metal has been fused.

Leg Length

The size of a fillet weld can be specified by leg length, being the distance from the apex of the angle formed by the two fusion faces, to the line where the weld face joins the parent metal.

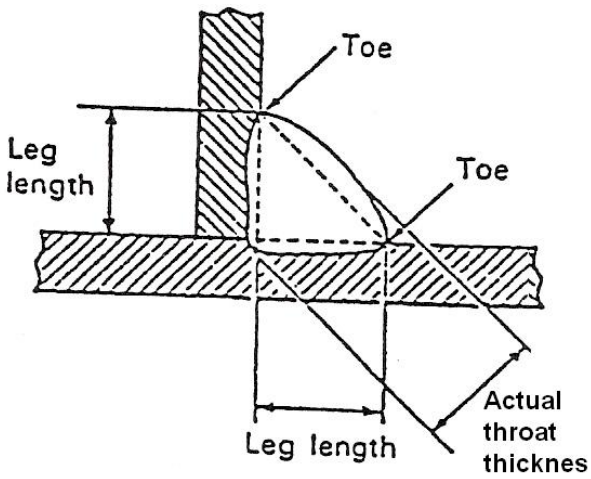

Figure 4 - Leg Length

Throat Thickness

The shortest distance from the root of the weld to the weld face of a fillet weld, or the thickness of weld metal in a butt weld measured at its centre line.

Parent Metal

The material or the part to be welded.

Penetration

The depth of the fusion zone in the parent metal or the distance that fusion goes beyond the root of the joint.

Excess Weld Metal (Reinforcement)

Metal deposited on the surface of parent metal, or the metal deposited, when making a butt weld, which is surplus to that required to make a flush joint, or the metal deposited when making a fillet weld, which is surplus to that required to give a mitre weld profile.

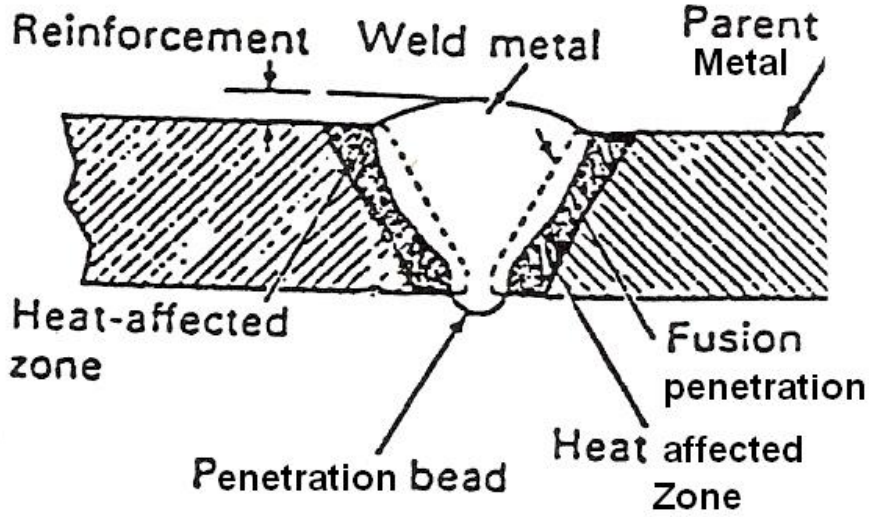

Figure 5 - Excess Weld Metal

Heat-Affected Zone

The part of the parent metal where the metallurgical properties have been changed by the heat of welding or cutting but not melted.

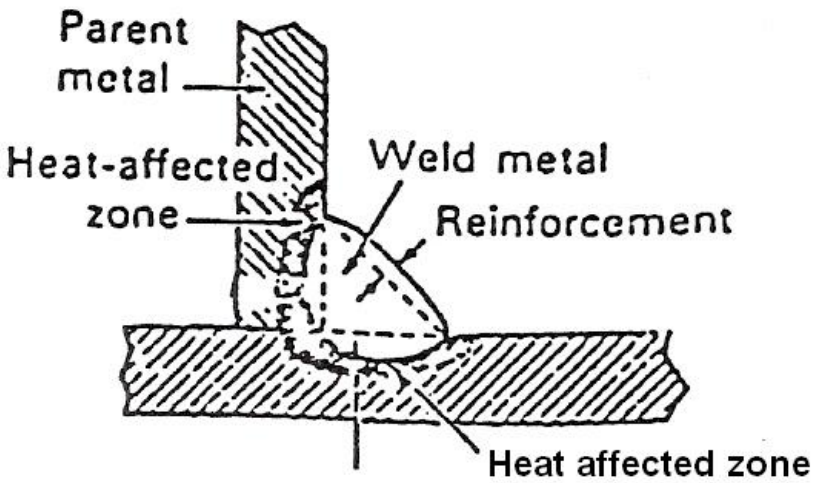

Figure 6 - Heat-Affected Zone

T Joint

1. Deposit a fillet weld with the 8 s.w.g. (4.0 mm) electrode.
2. Hold the electrode at an angle of 40° - 50° to the vertical plate and at 65° - 75° to the line of the joint, without weaving.
3. Counteract any tendency of deposited metal to fall towards the horizontal plate by increasing slightly the electrode angle to the vertical plate.
4. Adjust rate of travel so that a weld of equal leg length approximately ¼" (6.5 mm) is deposited.
5. After joint has cooled sufficiently to be handled weld the other side with the 6 s.w.g. (5.0 mm) electrode, using same technique but slightly faster rate of travel to deposit same size of weld.

Material	½″ (12.5 mm) mild steel, 2 off, min. 2″ (50.0 mm) x 12″ (30.0 cm)
Preparation	Square edge
Assembly	Tack weld both ends so that the plates form an inverted T without any gap between the plates.
Electrode	1st side 8 s.w.g. (4.0 mm) 2nd side 6 s.w.g. (5.0 mm) Class 2
Current	1st side 160-170 amperes 2nd side 200-220 amperes

Visual Examination

Saw through the welded assembly so that the transverse cross-sections of the welds can be examined.

The profile of the weld should be slightly convex, without any undercutting at the toes of the weld. Penetration to the root without any trapped slag should be achieved. At this stage, and using this type of electrode, penetration beyond the apex of the angle formed by the fusion faces should not be expected.

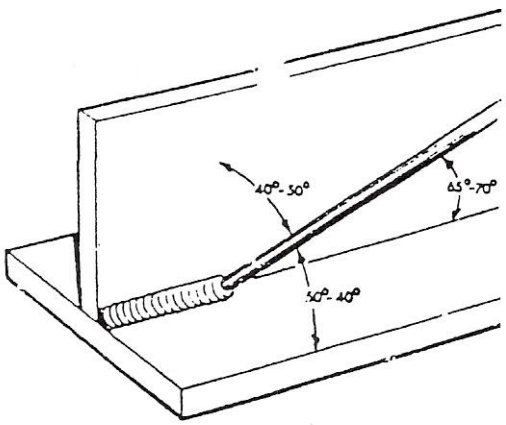

Multi-Run Fillet Weld

Example Procedure EP19

MATERIAL	welded T joint from EP16
ELECTRODES	as for EP16
CURRENT	as for EP16

1. Over the first run deposited with the smaller electrode, deposit a second run with the same site electrode.

2. Direct the electrode on to the horizontal portion of the first run, altering the angle of the electrode to 25° - 35° to the vertical plate.

3. Use a transverse slight weaving motion to obtain a 7/16″ (11.0 mm) leg length on the horizontal plate and fusion to a little higher than the centre line of the first run.

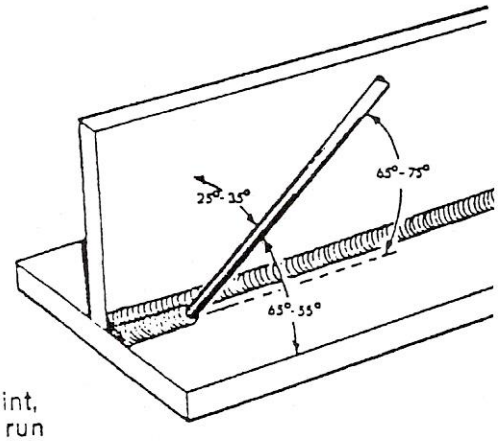

T-joint, 2nd run

4. Deposit the third run, above the upper portion of the first run, altering the angle of the electrode to 40° - 50° to the vertical plate.

5. Direct the electrode to obtain a 7/16″ (11.0 mm) leg length on the vertical plate and smooth fusion with the upper toe of the second run.

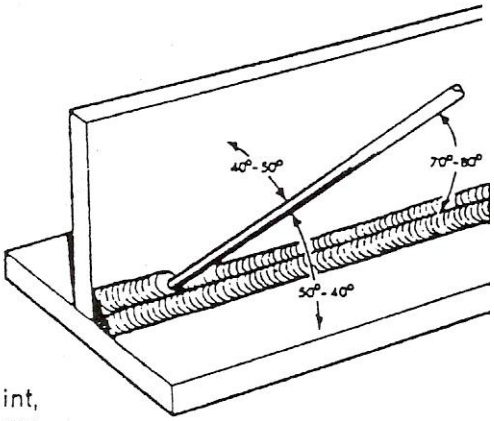

T-joint, 3rd run

6. Cool the assembly and then weld the other side of the joint with 6 s.w.g. (5.0 mm) electrodes.

7. Deposit two runs over the root run in a similar manner to the first side, to obtain the same size weld. A slightly faster rate of travel will be necessary.

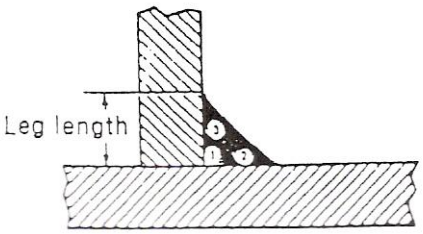

Stopping and Re-starting

An incorrectly finished weld or an uneven joint up in a weld run can make a local notch effect which may cause the weld to fail under load. Take care to build up craters at the ends of runs and to make smooth joins in runs.

The following techniques should be used in manual metal-arc welding unless otherwise stipulated.

Material	½″ (10.0 mm) mild steel, 1 off, min. 6″ (15.0 cm) x 12″ (30.0 cm)
Electrode	As selected
Current*	As selected

* At this stage the trainee should be able to assess whether or not the current selected is correct for the conditions.

Building Up Crater

Example Procedure EP6

1. Using the welding conditions as for previous examples.
2. Pause at the end of the run and shorten the arc length slightly.
3. Move the arc slowly backwards until over the centre of weld pool.
4. At the same time increase the angle of the electrode until it is at right angles to the plate surface.
5. Maintain the very short arc until the crater is built up with deposited metal and then break the arc.

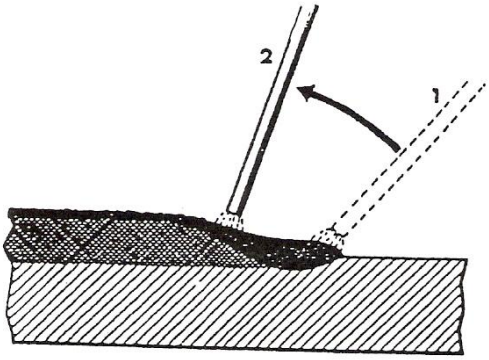

Re-starting Runs

Example Procedure EP7

1. Using the welding conditions as for previous examples.
2. After depositing one electrode, break the arc after only a slight pause over the weld pool.
3. With a new electrode, re-strike the arc at the leading edge of the deposit crater.
4. Move the arc slowly back over the crater in a loop movement to the back edge of the crater.
5. Resume weaving motion in the correct direction of travel and at the normal rate.
6. Break the arc. Repeat the procedure until a smooth join-up can be obtained.

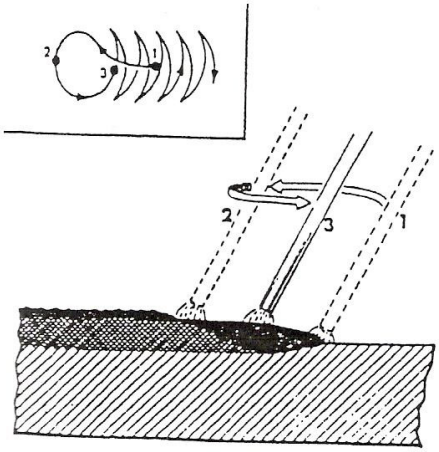

Distortion

To some degree distortion is present in all forms of welding. In many cases it is so small that it is barely perceptible, but in other cases allowance has to be made before welding commences for the distortion that will subsequently occur. The study of distortion is so complex that only a brief outline can be attempted here.

Causes of Distortion

Longitudinal Distortion

When a deposit is made on one side of a joint there is a tendency for the plate to bend upwards as it cools.

Transverse Contraction

If a butt weld is made between two plates that are free to move the edges will be drawn together. In extreme cases these may overlap.

Angular Distortion

Angular distortion pulls the plate being joined out of alignment. The tendency for angular distortion increases with the number of runs deposited.

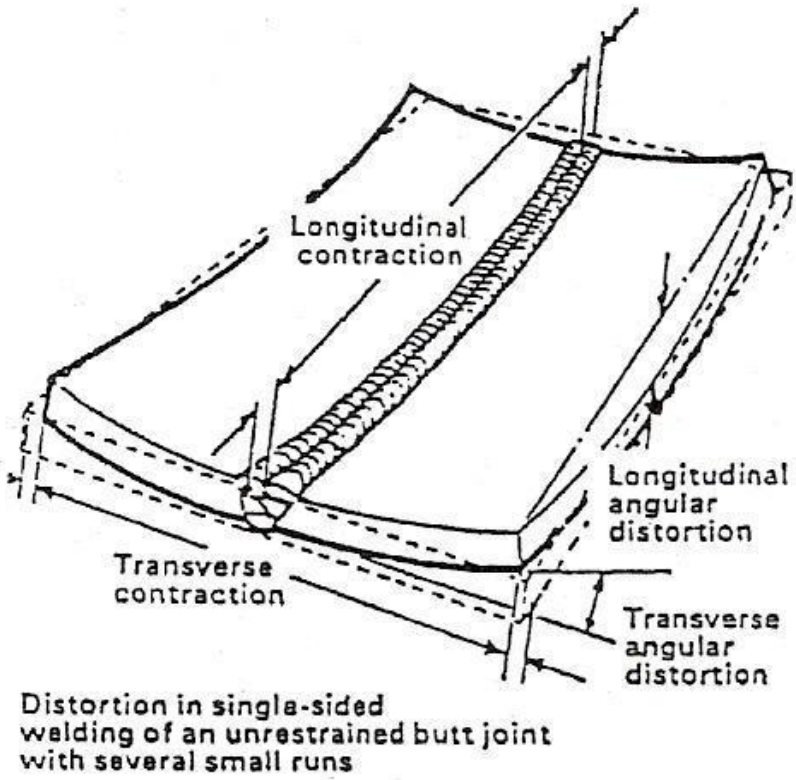

Figure 7 - Causes of Distortion

Overcoming Distortion

The amount of distortion which may be minimised by presetting depends upon:

- The amount of welding;
- The number of runs;
- The degree of restraint;
- The original condition of the parts to be welded;
- The procedure of welding.

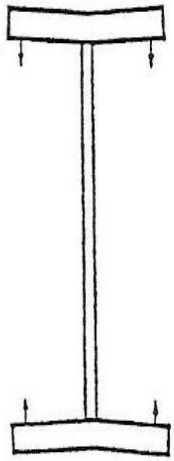

Allowing for distortion by pre-setting

Presetting

It is sometimes possible to tell from past experience or to find by trial and error (or less frequently, to calculate) how much distortion will take place in a given welded structure. By correct pre-setting of the components to be welded, contractional stresses can be made to pull the parts into correct alignment.

Distribution of Stresses

Distortion may be reduced by selecting a welding sequence which will suitably distribute the stresses so that they tend to cancel each other out. Choice of a suitable weld sequence is probably the most effective method of overcoming distortion, although an unsuitable sequence may exaggerate it. Simultaneous welding of both sides of a joint by two welders is very often successful in eliminating distortion.

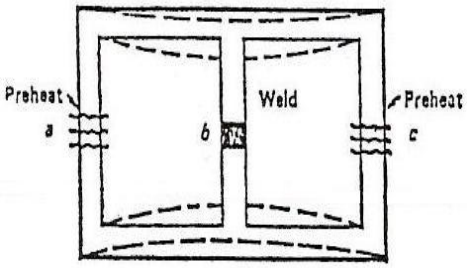

Dotted lines show effect if no preheat is used

Restraint of Parts

Forcible restraint of the components being welded may be used to prevent distortion. Jigs, positioners, and tack welds are methods employed with this in view.

Preheating

Suitable preheating of parts of the structure other than the area to be welded can be sometimes used to reduce distortion. A simple application is illustrated. By removing the heating source from a and c as soon as welding is completed, the sections a, b and c will contract at a similar rate, thus reducing distortion.

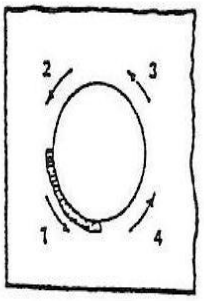

Welding patches
Allow to cool between each stage

Peening

This is done by hammering the weld while it is still hot. The weld metal is flattened slightly and because of this the tensile stresses are reduced a little. The effect of peening is relatively shallow and is not advisable on the last layer.

Self Assessment

Questions on Background Notes – Module 3.Unit 11

1. Sketch 3 symbols associated with M.M.A.

2. Sketch a weld showing:

- **a.** Toe
- **b.** Throat
- **c.** Leg length

3. Name 3 methods to limit distortion when welding.

Answers to Questions 1-3. Module 3.Unit 11

1.

Fillet:	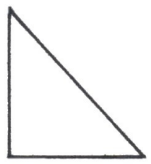
Butt:	
Single:	
Vee Butt:	
Double Vee Butt	

Single U Butt	

2.

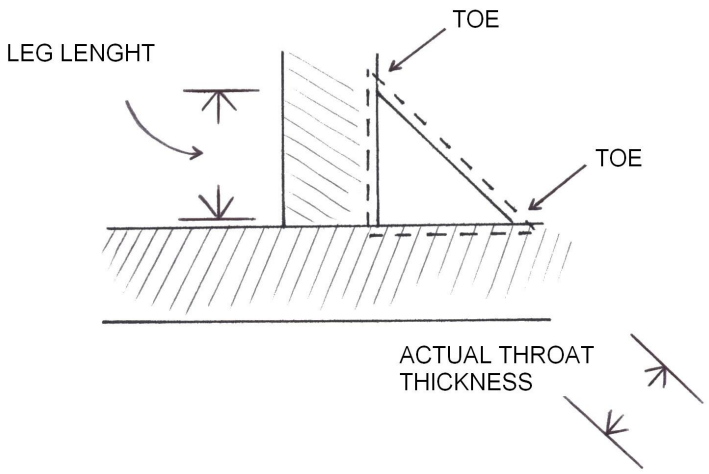

3.

- Presetting
- Distribution of stresses
- Preheating
- Restraint of parts
- Peening

Index

C

Causes of Distortion
- Angular Distortion, 21
- Longitudinal Distortion, 21
- Transverse Contraction, 21

D

Diagrammatical Representation of Principle Welding Positions, 11
Distortion, 21
- Causes of Distortion, 21
- Overcoming Distortion, 22

E

Excess Weld Metal (Reinforcement), 15

F

Fusion Face, 14
Fusion Zone, 14

H

Heat-Affected Zone, 16

L

Leg Length, 14

M

Multi-Run Fillet Weld, 18

O

Overcoming Distortion
- Distribution of Stresses, 22
- Peening, 22
- Preheating, 22
- Presetting, 22
- Restraint of Parts, 22

P

Parent Metal, 15
Penetration, 15

S

Self Assessment, 24
Standard Conventions, 13
- Welding Symbols, 13

Stopping and Re-starting, 19
- Building Up Crater, 19
- Re-starting Runs, 19

T

T Joint, 17
- Visual Examination, 17

Throat Thickness, 15